RTTY Journal

MARCH 1981

VOLUME 29 NO. 3

75 CENTS

EXCLUSIVELY AMATEUR RADIOTELETYPE

I8AA, dottor Rosario Pentimalli di Reggio Calabria.

* * *

« 5 CONTINENT WORLD RTTY CHAMPIONSHIP 1981 »

CONTENTS

Q.C. SYSTEMS-USERS REPORT..PAGE 4

MICROCOMPUTERS-K3ZCZ..PAGE 7

GUIDE TO RTTY FREQUENCIES..PAGE 13

RTTY JOURNAL

Dee Crumpton,KA6NYW
Editor & Publisher
P.O. Box RY
Cardiff-by-the-Sea,
California 92007 U.S.A.

John P. Goheen,KA6NYK
Associate Editor

THE RTTY JOURNAL IS PUBLISHED 10 TIMES PER YEAR. MAY-JUNE & JULY-AUGUST ARE COMBINED.

Second Class permit
Encinitas, CA 92024

Business Offices
1155 Arden Drive
Encinitas, CA 92024

POSTMASTER SEND FORM 3579 to:
POB 179 Cardiff,CA 92007

BACK ISSUES

A duplicate of any back issue may be obtained from R. Wilson, 4011 Clearview Drive, Cedar Falls,IA 50613. $1.00 PPD. Reprints of all UART articles $2.00

SUBSCRIPTION RATES

USA	$ 5.00 per year
Canada surf.	$ 6.50 per year
Canada Air	$ 7.50 per year
Mexico surf.	$ 6.50 per year
Mexico Air	$ 7.50 per year
Foreign surf	$ 8.50 per year
Foreign Air	$12.00 per year

ALL ABOVE MUST BE IN U.S.A. FUNDS

SUBSCRIPTIONS AND ADVERTISING ARE CASH IN ADVANCE.

FOREIGN SUBSCRIPTION MANAGERS

THE FOLLOWING MANAGERS ARE DROP SHIPPED THE RTTY JOURNAL ON THE SAME DAY THE RTTY JOURNAL IS MAILED BY SURFACE AND AIR MAIL TO THE REST OF THE WORLD. IN SOME CASES AIL MAIL GETS TO OUR READERS FASTER THROUGH OUR MANAGERS, IN OTHER CASES IT DOES NOT. HOWEVER, IT IS NOT AS COSTLY TO GO THROUGH MANAGERS.

EUROPE

JEAN HURTAUD, F8XT
CHILLAC
16480 BROSSAC, FRANCE

AUSTRALIA

NORMAN WILSON, VK4NP
POB 81 ALBION, BRISBANE
QUEENSLAND, 4010 AUSTRALIA

ENGLAND

DR. ARTHUR GEE, G2UK
21 ROMANY ROAD, OULTON BROAD
LOWESTOFT, SUFFOLK
NR32 3PJ, ENGLAND

JAPAN

KANJI YAMAMURA, JH2FHX
2-42 UMENOKI, IZUMI-MACHI
TOKI CITY, GIFU-PREF
JAPAN MAIL NO.509-51

REPRODUCTION OF ANY PART OF THIS MAGAZINE, IN ANY FORM, IS STRICTLY ENCOURAGED, IF CREDIT TO THE AUTHOR AND THE RTTY JOURNAL IS GIVEN. THE PUBLISHER ASSUMES NO RESPONSIBILITY FOR ERRORS OR OMISSIONS, NOR IS ANY LIABILITY ASSUMED FOR DAMAGES RESULTING FROM USE OF INFORMATION IN ANY RTTY JOURNAL.

• RTTY-DX •

Skip Prinsen, WB6CYA-3611 Merrimac, San Diego, CA 92117.(714)276-3182

Greetings to all..

The DXCC Honor Roll was printed in the January issue. It will again be printed in the July issue so now is the time for overseas readers to start going over their totals and getting your updated listings to me. Remember, I will keep your current listing until I hear otherwise from you.

For the newcomer; what is needed is two numbers. First is the number of countries that you have worked and secondly is the number that you have cards for such as 102|94 indicating that you have worked 102 countries and have QSL cards from 94.

I must have the information from you by the first of June in order to be able to get the listing compiled and then turned into the editor in time to meet the printing deadline.

This is the month of contests from the looks of the Kontest Korner. The first contest and the most popular contest of all will be on the 21-22 of March. I will be there on that one for sure. Paul, KOPJ/6 has written a contest program that runs with the Supertty program which will keep track of dups and keeps your logs for you at the same time. Both Paul and I will be running that program during this test. Hope to see you there.

The DX activity is on the upswing with the winter weather and here is a listing of some of the stations that have been heard on in the past six weeks or so. But first, I would like to thank John, W3KU, Paul, KOPJ/6, Hoppy, W3DJZ, AL W6MI, Jack W5HEZ, Ken W2PSU, WA6DQR, W2GHK and Bill WOLHS for their inputs this month.

9Y4NP-Trinidad, HP1XJZ- POB 3004, APO Miami, FL 34002, HP1XUL, HP3ML, XE1X, EA6DW, 6U25YP-Radio Club of Khartoum, Box 1533-Khartoum,Sudan., VS5TX- via JA1BK, 9M6MO-via JA1BK, HZ1TC-Yousef,QSL via I8YCP (Yousef is an Arabian Prince), TJ1CK-Conrad via DL1HH, TR8WR-QSL via F6ERG, YB2-BLI-Niko, Box 98, Yoga, Indonesia, DU1POL-Paul, 9K2KA-Kuwait Box 30SAFAT EI3CM, FM7BW, EA6HH, SP3CMX-Mieczylaw Czarnecki Walczaka 13/110, 66-400 Gorzow, Poland (first station on RTTY from Poland), SR1PBW, CN8AT-Hans Tangier,Morocco, QSL via Tangier ICA, Dept. of State, Washington, DC 20520, KX6QC-Cliff, via POB 65 APO San Francisco, CA 96555, T32AB- Lamarr QSL via W7OK, AP2KS- will be on soon, Gin JA1ACB is sending him some equipment, 1AOKM-Military Order, Knights of Malta was on weekend of Jan 24-25 and is trying for DXCC status. QSL via IOMGM, PY1TX, YV5APF, YJ8TT-Box 63 Santo Rep Vanuata, New Hebrides, EA9-EY, FK8CK, OA4BR, DU2MEL, VA9PP, HK2-ECK, A22PS/P/ZE-Zimbabwe, CP6IH-Box 163, Santa Cruz, ZP9CM-Box 1777, A-suncion, ZP5CCG, GI4AHP-Ted Sloan, 3 Adelaide Pk, Belfast,Ireland BT96FX

That's all for now folks.....
73 de "SKIP".....

HAM HELPS

WA7YOU James Fisher, 943 W. 4th St. Laurel, MT 59040 writes that he would like to put autostart on his Nat Stinnette NS-1A demodulator. Can some one assist him?

W4WSH Lee Denning, 1800 Snook Dr., Naples,FL 33942 asks if anyone can help him. He has a SOL 20/32 dual density dual drive Northstar system keyboard that he would like to use on RTTY. He is now using the Info-Tech keyboard.

KA9DLI Gary Fields, 57009 Hummingbird Ct.,Goshen, IN 46526 is looking for 11/16" RTTY, can anyone help him?

Francis Surovec, 3401 Butler Rd., Fort Wayne, IN 46808 writes that he would like to hook up a M300C to an old Viking Ranger II for FSK. Does anyone know of any AFK circuits that would work for him?

WOVTP Thomas Leary, 218 S. 95, Omaha, NB 68114 has a HAL ST-6000 and DS-2000KSR and noted that his 2000 was having keyboard problems. His board had Ver 2.4 on the status line. If you are having the same problem HAL has a $50.00 fix and they will update the keyboard for you. Tnx. Tom

W3KV John Possehl, Box 73, Blue Bell,PA 19422 recently obtained a Mod 33ASR and needs info to interface it to a 60 ma loop. John was the former DX editor for the JOURNAL as many of you may recall, so any help you could give John would be appreciated.

OOOOOOOOOOOOOOOOOOOOOOOOOOOOOOOOOOOOOO

AWARDS SECTION

"DXCC #52..dated 5 February 1981 to: JA1BK Kan Nizosuchi

OOOOOOOOOOOOOOOOOOOOOOOOOOOOOOOOOOOOOO

KONTEST KORNER

BARTG	21-22 Mar,81	Dec.80
N & S American Flash	28-29 Mar,81	Jan.81
Europe & Africa Flash	23-24 May 81	Jan.81
VK/ZL/Oceania	6 -7 Jun,81	coming
SARTG	15-16 Aug,81	coming
WAEDC	7 -8 Nov,81	coming
CARTG	October 1981	coming
Australia-Oceania & Asia Flash	Jan,82	coming

OOOOOOOOOOOOOOOOOOOOOOOOOOOOOOOOOOOOOO

The Canadian Amateur Radio Federation is pleased to announce the following awards available to all Radio Amateurs,world-wide:

CANADAWARD- A colorful certificate will be issued to any Amateur confirming two-way QSO's with all Canadian Provinces and Territories. All QSO's must be on one band only. Separate awards are issued for each band on which the applicant qualifies. (12 cards per band). A mode endorsement is available if all QSo's are made on the same mode (CW,SSB,RTTY,SSTV)). Contacts made after July 1,1977 only will count for this award. Submit the cards with $2.00 Canadian or US funds or 10 IRC's plus sufficient funds for return postage.

5 Band CANADAWARD- a special plaque is available to any Amateur who confirms two-way QSO's with all Canadian Provinces and Territories on each of five separate bands.(Total of 60 cards-12 per band) Submit the 60

cont. on Page 4 column#3

USERS REPORT-SUPER RTTY SYSTEM

BY Paul Johnson KØPJ/6
3425 Gurnard Ct.
San Diego, CA 92124

Having been a computer programmer for sixteen years and an avid RTTY operator for five years, I was asked by the RTTY JOURNAL to do a users report on the new Super RTTY System by Q.C. Systems. After using this system for a month tearing it apart and putting it back together, I can highly recommend it as an economical, solid RTTY operating system.

The Super RTTY program is a full disk I/O system designed specifically to operate on Heathkit H-89 and H-8 micro processors. Both ASCII and Baudot codes are supported along with automatic CW ID if selected.

The system is supplied on two disks one containing the object code and system documentation, and the other containing the source codes. Access to the source is one of the outstanding features of this system over other commercially available systems.

A very unique feature of this program is the use of a Default file on the operating disk for setting at your setting at your desired operating perameters, including setting the data for any of the three line buffers. These perameters may also be changed at any time you are in the Receive Command mode.

The program creates one disk file that can be used as the station RTTY log for a month at a time. This file contains all the information about System Start up/Shutdown, transmitter on/off time and station operator, along with any notes the operator wishes to include.

If the operator desires, all received data can be saved on another disk file.

There are provisions in the program for transmitting any file on the operating disk.

There are provisions in the program for line printer or alternate terminal on line hard copy of both Received and Transmitted data.

Super Ratty's Screen display is also unique. The display is three leveled, with an adjustable split line separating Received data and Command/Type ahead data. The outgoing data is displayed in Reverse Video Marquee fashion on the 25th line. This line is cleared while in the Receive/Command mode.

Received data is displayed on the line above the split line and scrolls up and off the screen. Commands and type ahead transmit data are displayed on the 24th line and scroll up to the split line.

The split line displays present real time in hours and minutes.

Commands used with the system are straight forward shorthand notations of the function to be performed.

As there are many different commands for the program, a prompt card made from the last two pages of documentation are extremely useful until the operator gets used to the system.

The more one uses this system on the air, the more you like its many and varied features.

Two things this operator disliked were the need to close the type ahead buffer prior to entering the transmit mode and the extreme slowness of the CW ID.

The program is very well written, in a sophisticated modular concept.

To fledgling programmers the best parts of this system are the price and inclusion of the Source listing. If you don't like a feature of this system you can change it.

I have just finished a "contest" addition to this operating system which will give universal contest line selection, automatic contest message generation (with message number up-date) and automatic Band/Call sign duplicate checking upon entry of a call sign. Provisions were included for logging of Received and Transmitted contest information and the split line was expanded to include date, RST to be sent, current message number, and the callsign of the station being worked, all in reverse video for highlighting.

For economical price, this is a RTTY operating system no Heath user can afford to not have in his library.

0000000000000000000000000000000000000

Everyone wants to know if the RTTY JOURNAL will be going to Dayton this year..We don't know as yet but are hopeful that time and money will allow us to get there this year. More on this next month..Dee, KA6NYW

continued from DX column

cards with $25.00 Canadian or US funds plus sufficient funds for return postage. Canadian Provinces & Territories are as follows: VO1/VO2 Newfoundland & Labrador

VE1	Prince Edward Island
VE1	Nova Scotia
VE1	New Brunswick
VE2	Quebec
VE4	Manitoba
VE5	Saskatchewan
VE6	Alberta
VE7	British Columbia
VE8	Northwest Territory
VY1	Yukon Territory

Note: VO2, Labrador is part of the Province of Newfoundland and counts for Newfoundland. All Amateur bands may be used. Each distinct satellite mode (432 in/144 out, 144 in/29 out, 144 in/432 out etc.) will count as a separate band. Mail applications for CANADAWARDS to POB 2172, Station D, Ottawa, Canada K1P 5W4.

0000000000000000000000000000000000000

CONTESTS*CONTESTS*CONTESTS*CONTESTS*

Canadian calls heard in the 1980 CARTG RTTY BIG SMOKE last October numbered 37, which is the best Canadian participation in a CARTG contest to date., VE4UA and VE5RC claimed "green RTTYer" status and we welcome them to our annual contest and will be looking for them in our 1981 contest.

Some Comments:

W6JOX-"Lots of VE's this time.

W0LHS- This was my first RTTY contest although I was in RTTY back in 1952-54. Sponsor more contests-they're a lot of fun.

VE2JR- Conditions were pretty good but I wonder where all the new RTTY ops were hiding. Heard nothing on 40 and 80.

HB9LP-We would like very much to work next year as multioperator during 48 hours. Why can a multiop-stn only work 30 hours??

VE7YB-managed to get the stacked antennas up for 10/15 and 20..and also some inverted Vs for 80 and 40 just in time. Noted there were several more VEs on since the last contest.

The 21st CARTG RTTY DX will be on the weekend of October 17-18,1981 See you then??

continued on page 5

THE CANADIAN AMATEUR RADIO TELETYPE GROUP (VE3RTT) Sponsors

the 20th Annual W/V RTTY DX 'New Decade' Sweepstakes
October 18-20th, 1900.

W/VRDX		High Scores.	
1.	V3FV	3,796,198	Plaque Awards - "CARTG" & "RTTY JOURNAL"
2.	I5FZI	2,712,360	" "
3.	K7DX	2,652,680	" "
4.	I7FEO	2,218,100	" "
5.	W4CQI	1,837,140	" "
6.	JA6GIJ	1,546,968	" "
7.	VE2SO	1,264,900	" "
8.	SM6ASD	1,252,702	" "
9.	G3HJC	1,281,624	" "
10.	DL1VR/EA4XV	1,168,896	" "
11.	VE2JR	1,129,576	Plaque, "President CRRL Award"
12.	VE1US	37,203	Plaque, "Green RTTYer", "Sidney Burnett Memorial Plaque"
13.	VE7DTA	263,488	Plaque, Low power Canadian station (under 100 watts) "West Coast Canada Award" sponsored by VE7AKV
14.	V3FV	30	two-way RTTY contacts with Canadian stations Plaque sponsored by VE2JR
15.	LZ1KDP	1,677,264	Multi-operator station, Plaque - "CARTG"
16.	OK1-11857	1,429,120	S.W.L. Printer, Plaque, "CARTG"
17.	OH5UG	19	two-way RTTY contacts on 80 meters. Plaque "CARTG"
18.	V3FV	23	two-way RTTY contacts on 40 meters. Plaque "CARTG"
19.	V3FV	76	two-way RTTY contacts on 10 meters. Plaque "CARTG"

Certificates issued to top scores in each U.S.A., VE/VO and VK Districts and each Country.

Countries Worked: S.Africa, SW.Africa, Antarctica, Argentina, Austria, Australia, Belgium, Brazil, Bulgaria, Canada, Chile, Crete, Czechoslovakia, Denmark, England, Faroe Is., France, Germany, Greece, Guam, Hawaii, Hungary, India, Israel, Italy, Japan, Luxembourg, Malta, Malaysia, Mexico, Morocco, Netherlands, Newfoundland, New Caledonia, New Zealand, Norway, Okinawa, Panama, Portugal, Rumania, Sardinia, Scotland, Spain, Sudan, Sweden, Switzerland, U.S.A., U.S.S.R., Venezuela, Wales

PAGE 5 continued on page 13

THE CANADIAN AMATEUR RADIO TELETYPE GROUP (VE3RTT)
20th Annual W/V RTTY DX 'New Decade' Sweepstakes.
October 18-20th, 1900.

Scores for Single Operators

1.	*V3FV	3,796,198	34.	EA7DM	182,000
2.	*I5FZI	2,712,360	35.	VE7DOC	171,420
3.	*K7DX	2,652,600	36.	VE7DLX	132,044
4.	*I7FEO	2,218,100	37.	K0BJ	117,570
5.	*W4CQI	1,837,140	38.	VE3KP	105,000
6.	*JA6GIJ	1,546,968	39.	VE6GL	85,950
7.	VE2SO	1,264,900	40.	VE2BO	65,040
8.	*SM6ASD	1,252,702	41.	JR2TXL	60,252
9.	*G3HJC	1,281,624	42.	VE5WZ	56,422
10.	*DL1VR/EA4XV	1,168,896	43.	W0LRE	37,203
11.	*VE2JR	1,129,576	44.	OT7EP	31,600
12.	*DL5RAS	1,002,920	45.	VE4GA	29,906
13.	*HB9LP	1,014,040	46.	LA2IJ	22,408
14.	*U3KY	998,404	47.	VE5RG	17,400
15.	*W6JOX	866,134	48.	G3RBG	16,600
16.	*VE7YD	845,520	49.	W2KHQ	10,040
17.	OH5UG	660,140	50.	VE4MZ	9,720
18.	VE2XO	621,888	51.	VE3BPH	7,600
19.	UA6UGL	574,400	52.	SM5AAX	2,200
20.	VE4DF	522,265	53.	VO7CO	200
21.	IO1RA	501,000			
22.	UA2OQO	455,304			
23.	VE1GH	390,920			
24.	GW3EHH	388,035			
25.	*OR4PL	314,024			
26.	OR7AZ	283,352			
27.	V7HI	267,616			
28.	*VE7DTA	263,488			
29.	VO1EE	241,360			
30.	*DF3HI	220,092			
31.	VE0CH	220,228			
32.	SM2CR	215,070			
33.	KØPJ/6	188,150			

Multi-Operator

1.	*LZ1KDP	1,677,264
2.	HA6KVD	376,540
3.	OR7OZ	29,046

S.W.L. Printer

1.	*OK1-11857	1,429,120
2.	Horst Dallenberger	1,303,990
3.	G8CDM	379,095
4.	DE-G10/1669613	29,046
5.	Kurt Wistner	21,072
6.	DK4IB	1,009

Check Logs: IS0ERE, SM6ARN, OZ1DAF, UA9PP.

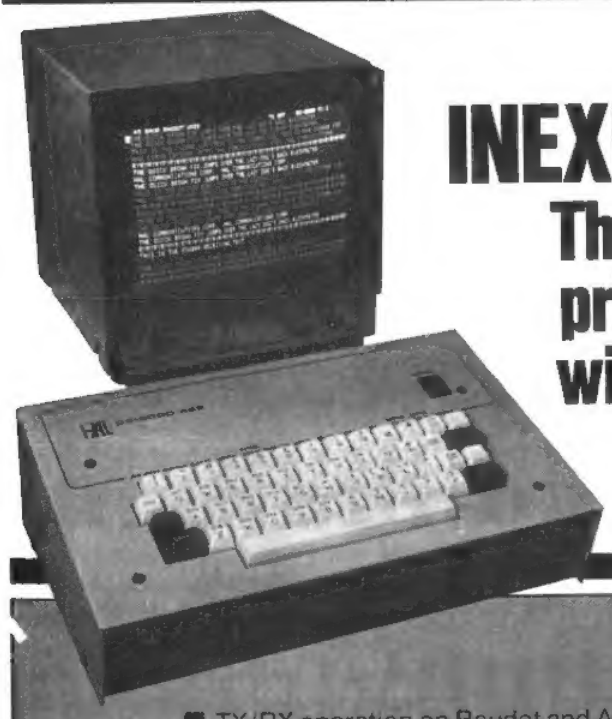

INEXPENSIVELY SUPERIOR

The DS2000 KSR is the lowest priced RTTY terminal available with these advanced features:

- TX/RX operation on Baudot and ASCII RTTY plus Morse Code (Morse RX optional)
- Integrated keyboard and video generator allows editing of transmit text
- Full 24 line by 72 characters per line display
- Bright/dim display of characters differentiates between TX and RX display
- Morse receive option may be added at any time
- Separate CW identification key for RTTY operation
- Status line on top of screen shows terminal operating conditions
- Pretype transmit message into 255 character buffer; edit before transmitting
- 2 programmable "Here Is" messages
- Word-wrap-around prevents word splitting at end of display line
- Word mode allows editing of text to be transmitted
- Quick Brown Fox and RYRY test message keys
- Small size metal cabinet gives effective RFI shielding from transmitters
- Loop compatible RTTY connections and plus or minus CW key connections
- 110 and 300 baud ASCII
- 45,50,57,74,100 baud Baudot
- 1-175 wpm Morse transmit
- 1-175 wpm optional Morse receive
- 120/240 v, 50/60 Hz power
- Internal CW side-tone
- UnShift On Space for Baudot
- Keyboard Operated Switch
- SYNC idle for RTTY
- One year warranty

Write or give us a call. We'll be glad to send you our new RTTY catalog.

HAL COMMUNICATIONS CORP.
Box 365
Urbana, Illinois 61801
217-367-7373

DS2000 KSR	$499.00
ESM-914 Video Monitor	$169.00
MR2000 Morse receive option	$159.00

For our European customers, contact: Richter & Co. D3000 Hannover 1 • I.E.C. Interelco, 6816 Bissone/Lugano • Radio Shack Ltd., London NW6 3AY • Erik Torpdahl Telecom, DK 3660 Stenlose Denmark

MICRO COMPUTERS IN AMATEUR RADIO

BY Joe Kassner, K3ZCZ
11532 Stewart Lane
Silver Spring, MD 20904

Interfacing an S-100 bus computer to an Amateur radio station is now almost child's play, thanks to a set of cards from Snow Micro Systems,Inc. They have a set of cards as follows:

AR-1 RTTY Interface Card

This card contains a serial port using an USART (8251). It can thus be switched from ASCII to Baudot in software. It also contains a crystal controlled software programmable baud rate generator for 45.5, 50, 75 and 110 WPM. The serial port interfaces is at RS-232 levels. This card can thus drive a Model 15, 28, 33, 35 or 37 printer or interface to existing ST-5, ST-6, AK-1, AK-2 or other RTTY terminal units/ (a)fsk equipment already in the shack. For those who do not have RTTY but have an S-100 machine, the AR-1 card has an ST-5 TU and an AK-2 AFSK generator, built on the card. The modem handshake signals are used to perform the CW ID function and to provide a 'signal presence' to the computer. This signal detect feature is also usuable as a CW detector for Morse code programs. A block diagram of the card is shown in figure 1.

SC.-1 Station Controller Card

The card was designed for process control applications. It contains six reed relays for transmitter and antenna control purposes, a seven channel input analog to digital converter for reading antenna position or signal level info back into the computer and a hardware time of day clock based on a 5318 integrated circuit. The clock circuit keeps running when the computer is powered down. A block diagram of the card is shown in figure 2.

TM.01 Trump Card

This card was originally designed for use in the AMSAT Phase III Satellite Telemetry tracking and Command Network. It is a very versatile card and is thus useful in the ordinary Amateur radio/computer station. It contains two programmable parallel i/o ports whose outputs are pin compatable to the SSM-IO-4 board, a serial port using an 8251 USART (i.e. BAUDOT or ASCII), an 8253 programmable counter/timer driving the USART and the Interupt generator circuitry. An audio tone generator, also present on the card, is available for use as a CW monitor or regular "bell' character. A block diagram of the Trump Card is shown in figure 3.

COMMENTS- POSITIVE

The design of the cards was well thought out. The use of the modem handshake circuits on the AR-1 for CW ID and signal detect is a good idea. The 16 pin dip connector interface between the analog and digital sections of the card increase its utility. It can be used to interface an existing RTTY station or printer to the computer or as a stand alone complete system. The ST-5 TU, however is not optimum for HF usuage but will provide good copy on many signals. It works fine on the commercial frequencies too. The traditional scope tuning pick-up points are also brought to the 16 pin connector. Note that all wires interfacing the card should be shielded, else they make great antenna's for spreading computer generated RFI into the shack.

The SC.01 Card has provision for a number of different kinds of relays including 6 volt commercial grade high current or low current as well as 5 volt DIP packaged ones. The analog to digital conversion is performed by a 3½ digit voltmeter integrated circuit.

The TM.01 card is very flexible. The USART can be connected up for internal or external (to the card) clock signals. The interface is at TTL levels. The interrupt generator circuit can be set to provide periodic interrupts or as required by the USART. The tone oscillator is versatile at one of two tones (400 or 800 HZ). The parallel ports are nice for driving a frequency synthesiser or other similar equipment.

COMMENTS-NEGATIVE

In terms of hardware, the use of 88mH toroids on the AR-1 card, means that the card requires two slots in the bus for proper clearance. However since the toroids are on the edge of the card away from the mother board contacts, the second slot could be filled up by a short card such as a terminator card. The TM.01 Trump Card design is a little flaky, and the card is prone to high speed glitches. The address decoding is performed using, amongst other IC's an 82S23 Prom and a 74L42 decoder. Snow recommends the L series device to minimize these glitches. In most systems it does; however, it may not in all, thus requiring the deglitch capacitors. In spite of that, it is a good card.

In terms of pricing the kit is excessive, considering that all a kit is, is a bare board package and parts. The individual parts can be obtained from advertisers in the JOURNAL for less than the list price of the kit.

AVAILABILITY

The cards are designed for group construction projects or knowledgeable individuals. As Such, the bare boards come with parts, lists, schematics, layout drawings, and software listings as applicable. Kits seem to be a bare board package and parts. The assembled and tested cards come with the same documentation and a 90 day warrantee. The cards are available from Snow Micro Systems, POB 1704, Silver Springs, MD 20902. Send SASE for prices. Snow states that bare cards may be returned for instant refund if buyer decides that they cannot construct the card from the package supplied, providing that no part has been soldered to the card

SUMMARY

These S-100 cards are ideal for use in an Amateur radio station. Using these cards and a mixture of the soft ware developed by Snow, and homebrew, new vistas in automatic and semi-automatic station operation open up. With the corresponding software, OSCAR;s can be tracked, RTTY can be automated and in general hamming becomes more fun.

 schematics on pages 8 & 9

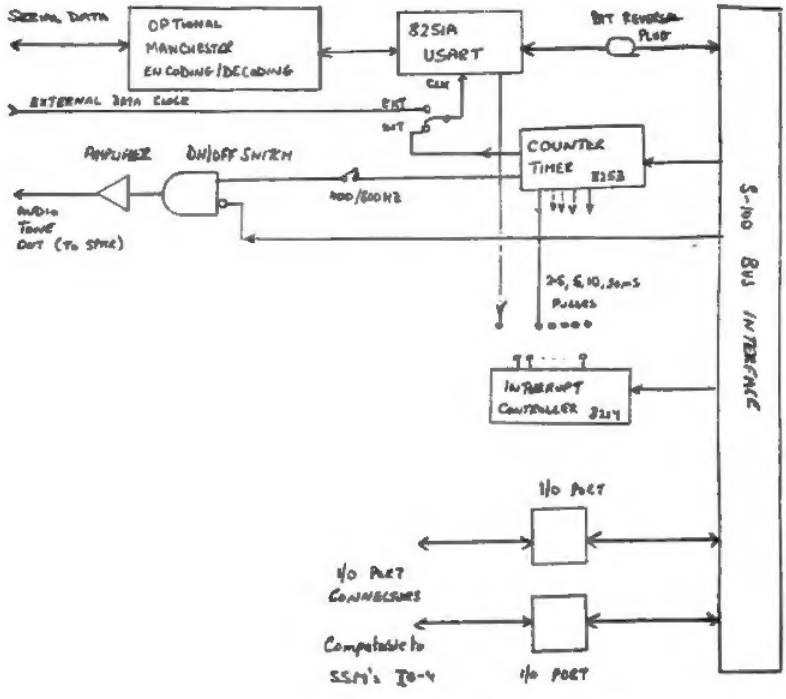

TM-01 TRUMP CARD

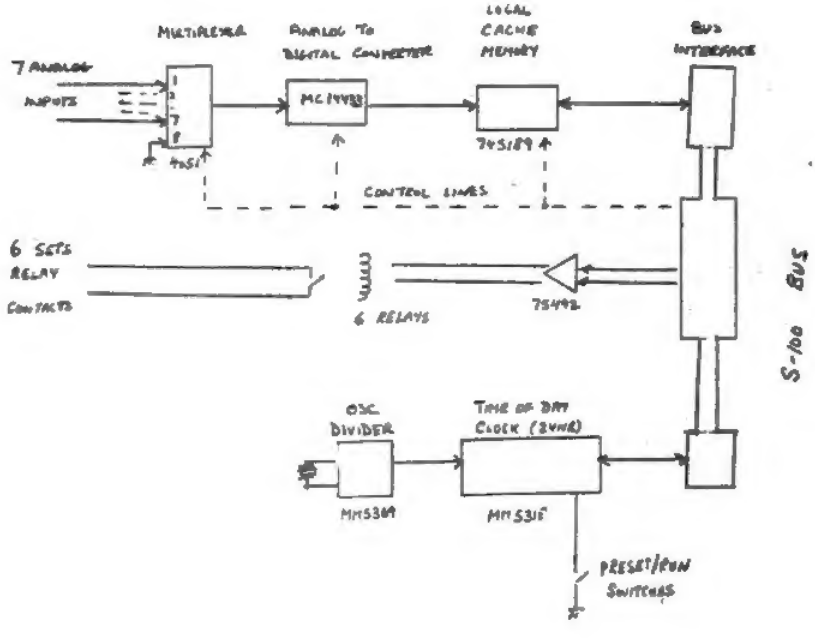

SC.01 BLOCK DIAGRAM

 continued on page 9

DIGITAL ELECTRONIC SYSTEMS, INC.

1633 WISTERIA CT. ENGLEWOOD, FLA. 33533 813-474-9518

The INFO-TECH M-77 COM-CLOCK

A microprocessor based station accessory that will, on command:

1. Send your call in Morse, Baudot, or ASCII.
2. Send date and time in Morse, Baudot, or ASCII.
3. Respond to sel-calls with pre-programmed message.
4. Give continuous readout of date and time on built-in L.E.D. display.
5. Act as a beacon controller sending call, date, time, and pre-programmed message.
6. Act as a programmable clock with several function outputs.
7. Perform a host of other functions using the built-in 16 button keyboard.

Inputs: MIL 188, TTL, EIA, isolated loop, PTT, remote operate

Outputs: MIL 188, EIA, TTL, isolated loop FSK $\overline{\text{FSK}}$ AFSK (2 shifts) grid and cathode keying, + 6 open collector programmable outputs.

Available about February 1, 1981

For more information write:

Digital Electronic Systems
1633 Wisteria Court
Englewood, Fl. 33533

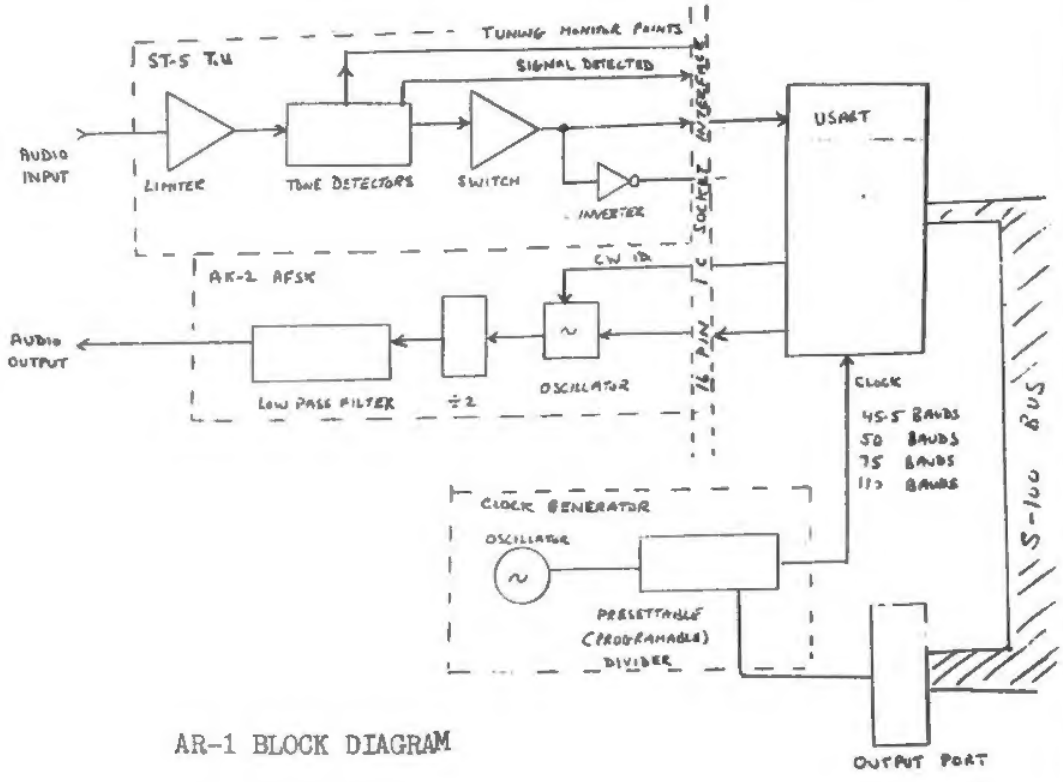

AR-1 BLOCK DIAGRAM

HITS & MISSES

George Hammon WA6CQW
14215 Pecan Park Lane SP 73
El Cajon, CA 92021

FROM THE MAILBAG

MAIL RATE

On January 1,1981 the overseas mail rate was increased. The former 31¢ per half ounce was increased to 40¢ per half ounce. Also, the old style IRCs are no longer of any value. The old style were the type that had the originating country printed on them in red. When sending direct air mail overseas please note.

MOROCCO

Hans Dankeri, CN8AT will be operating from Tangier, Morocco. Hans has a three element beam overlooking the Mediterranean. The other active station from Morocco, on RTTY is CN8BI. QSL's for CN8BI go to IOUWG. For CN8-AT Stateside QSL's go to Hans Dankeri Tangier, USICA, Department of State, Washington, DC 20520. All others go to OE3NH.

AMATEUR RADIO CALENDAR

Do you need a large wall calendar? A calendar which has the space to keep track of up-coming contests etc. The Lockheed E.R.C Amateur Radio Club has one measuring 13.5 x 19.5. If this sounds good, send three (3) dollars, check, cash IRC's even US Postage to W6LS, 2814 Empire Avenue, Burbank, CA 91504 is the ordering address. Please enclose your address label as the calendars are mailed in sealed wrappers.

220 MHZ

In the December 1980 issue of POPULAR ELECTRONICS is an article on cordless telephones. This article points out possible usage in the 27 or 220 MHz band. The 220-225 MHz band is being constantly eyed by other services. Users of the Inland Waterways System would like to have the 220-225 MHz band (ref. FCC General Docket 80-1). The present 160 MHz Marine Band is highly congested. A storm of protests from 220 users brought a quick correction from the FCC. The FCC cited the 216-220 MHz for POSSIBLE expansion. The ARRL is well aware of the fact that many service's and or manufacturers want the 220-225 MHz band. This is quite apparent after reading articles like the one in POPULAR ELECTRONICS. We all know how quick big money snapped up our 27 MHz band. The need to let your league officials know your thoughts on this matter is vital. The ARRL is planning a determined campaign to keep hands off our 220 band, let's help them.

SAN DIEGO TELEPRINTER SOCIETY

The San Diego Teleprinter Society held its December meeting on the 13th along with the annual raffle. Bob Williams was the proud winner of the 28KSR. Election of officers for 1981 are as follows:President Jake,K5WTA/6 Vice-President Lem,WA6PBO, Treasurer AL, W6SSL and Secretary Chris, WB5TWK /6.

SCATTER

The cover on this months SCATTER (Southern Counties Amateur Teleprinter Society) was really great.

REPEATER SITE IN NORTHERN ALASKA

5 BAND AWARDS CHECK SHEET

A free 5 band awards check sheet can be obtained from Glen Whitehouse,K1GW of Cushcraft Antennas, Box 4680 Manchester NH 03108. It's yours free for a large SASE. Thanks Glen.

INTERNATIONAL DX CONVENTION

The 1981 International DX Convention will be held at the airport Holiday Inn at Visalia, California. The dates are: May 1st, 2nd and 3rd 1981. Further information may be obtained from NCDXC, Box 608, Menlo Park,CA 94025.

PICTURES

Every month, the JOURNAL receives beautiful pictures of RTTY stations, trouble is that our printer just cannot handle most color pix as they either have too much red, or are too dark, or the contrast is not good. We love to print pictures, especially with you in them. So send us pix, especially black and whites with strong contrasts. Pix of DX expeditions,club meetings, projects, finished or other wise, cartoons are always enjoyed by all. Who knows you may make the front cover.

ARTICLES

The RTTY JOURNAL needs your articles. The scope here is limited only by your imagination. These too could be projects, RTTY DX Expedition (several last year would make great article's), accessories for your RTTY station and club projects. Please type your article, double spaced if possible, and if there are drawings or schematics please do them in BLACK ink the printers cameras cannot 'see' blue. I know of several clubs that set up demonstration stations in shopping malls and others went on field expeditions. How about an article?

DX EDITOR'S

CQ Magazine has a new DX editor, Hugh Cassidy. I sent in a subscription when he came aboard. We all remember his west coast DX bulletin. QST it appears will also make a switch. Ellen White,W1YL will take over the editor's reins of "Hows DX" in March. Ms. White departed the paid headquarters staff in 1978 after a 25 year career.

REDUCING APPLE II RFI

This is the subject of an article, RFI: The FCC and your Apple which appears in the Fall 1980 edition of Apple Orchard,Published by the International Apple Core, P.O. Box 976, Daly City,CA 95017. A parts kit from Apple computer under part number 652-0152 is available, it consists pf two 0.1 MF capacitors, two solder lugs and six ferrite beads. My friendly local Apple dealer tells me that this service is "performed as required" by your friendly Apple dealer.

16 BIT

Apple computer is rumored to have a hugh quantity of Motorola's 6800 for their planned Apple IV and Apple V. They will contain the 16 bit version of MOS technology 6502 (6516).

continued on page 13 column #2

CLASSIFIED ADS

30 WORDS $3.00.ADDITIONAL WORDS 5¢ EACH CASH WITH COPY--DEADLINE 1st of month for following month.

NOW KEEP SENDING WHILE YOU CW ID.The MS-738 AFSK tone mixer is the VHF'ers answer.See November 1979 RTTY JOURNAL for full description.Kit $10.95 plus $1.25 shipping.DAYTAPRO ELECTRONICS, 3029 N. Wilshire,Arlington Hts,IL., 60004.Visa/MC accepted.

SATELLITE LOCATOR:FIND SATCOM-1,GOES-1 others.Computer generated,typically gives direction and elevation to 157 geostationary satellite positions visable from your unique location (horizon to horizon,one degree increments).Send $10 and your latitude, longitude in degrees,minutes to PPI, Box 74-RJ,Mobile,AL 36601

TELETYPE MACHINES,ALL MAKES & MODELS and allied items.25% off on everything.SASE for list.Goodman 5454 S. Shore,Chicago,IL 60615.312-753-8342.

TELETYPE PARTS WANTED.Any quantity, any models,highest prices paid.210-464-5310.Van W2DLT,Box 217,Berkeley Hts, NJ 07922.

TOROIDS WANTED FOR EXPORT,Any quantity,88mhy.load coils.201-464-5310 Van W2DLT,Box 217,Berkeley Hts,NJ 07922.

GOVERNED MOTORS,TELETYPE LMU 39/LMU 41 wanted.Also Teletype ESU for ASR/KSR 28 Lo-Level/RFI (Gold box located in kneewell of unit,or will buy/swap whole units) 201-464-5310.Van W2DLT, Box 217,Berkeley Hts,NJ 07922.

TELETYPE 43 KSR/EIA at cost $848 new, also M33 ASR good condition $325.201-464-5310.Van W2DLT,Berkeley Hts,NJ 07922.

SALE!RTTY ID GENERATOR.Accepts 5 or 12 volt supplies,31 RTTY characters available,(please include letters, figures,spaces etc.) Your preprogrammed answer-back must be supplied with order. EX:DE YOUR CALL,NAME,CITY & STATE. See Jan.'80 RTTY JOURNAL for description. Board is same size as popular ST-6 boards. Kit $34.99 now on sale $24.95,Board alone was $8.50, now priced $4.00.Please add $1.50 for shipping.DATAPRO ELECTRONIC,3029 N. Wilshire,Arlington Hts, IL 60004.Visa MC accepted.312-870-0555.

"IRL"FSK-1000 & FSK-500's. We are dealing so call or write to T&D Sales 524 Sixth St.,Fremont,OH 43420. Phone 419-334-3462. These units are probably the best for the money so why not give us a call prior to investing into another one??

UT-4D KITS & BOARDS. Now better than ever. Complete speed conversion with many extras,which include, transitional autostart,on-board clocks, expanded buffer and easy assembly. Board is the same size as DT-600 TU ($4\frac{1}{2}$ x $6\frac{1}{2}$).See our other ad for power supply and optional crystal clock. Board kit for UT-4D $109.95. Plated thru board alone $22.95. Please add $1.50 for shipping. DATAPRO ELECTRONICS, 3029 N. Wilshire,Arlington Hts, IL 60004. Phone orders welcome, Visa/MC. 312-870-0555.

SALE*SALE*SALE*SALE*SALE;HEAVILY INKED UPI RIBBONS,FITS ALL TELETYPE MACHINES $6.50 doz.; Dual spool red & black ribbons $14.50 doz.; perforator tape 11/16" x 8" case of 40 rolls $19.50; 1" x 8" case of 28 rolls $19.25; Black 1" x 8" box of 7 rolls $7.50; Strip printer tape 3/8" wide ungummed box of 25 rolls $14; Model 28 self contained, stand alone typing reperforator with 3 speed gear shift $120; Single speed $95; Model 28 TD $99. Roll paper, Canary or white 5" diameter case of 12 rolls $25. Model 28 ASR complete but not rewired nor checked $255; Model 28 ASR complete & checked, rewired for local loop $300; Model 28 Typing units sproket feed,less type box $99; Model 28 typing units friction feed,less type box $149; Model 28 ASR auxillary reperf type LARP complete with motor, base and mounting studs to fit inside model 28 ASR cabinetbehind TD $99.All prices are FOB Brooklyn,NY ATLANTIC SURPLUS SALES,3730 Nautilus Avenue, Brooklyn,NY 11224. Tel:212-372-0349.

FACSIMILE: TWO RECEIVE UNITS, Nufax D-649-L/P 18 inch vintage 1960 Mfg. England. Surplus from major NYC publisher, maintained in excel. condx. With 1 roll paper,spares,wiring,handbooks. One works fine, goes for $95 separately; other needs fix of one drive motor, goes for $75 separately; both together for $150 or best offer. Will trade for comp. line printer (with cash for difference?). Spec sheet for SASE. Dwight Ernest KA2CNN, 223 W 21 #4H, NYC 10011. Source TCU-366, Micronet 70210,523.

NEWS-NEWS-NEWS-NEWS-Amateur Radio's Newspaper,"WORLDRADIO", Trial subscription-Two issues for one dollar. WORLDRADIO, 2509-F Donner Way, Sacramento, California 95818.

WORLD PRESS RADIOTELETYPE station lists. Over 50 different worldwide press services contained in 3 lists. By time, by frequencies and ITU combination list. All transmitting in English. 24 hours. Hundreds of confidential and fascinating RTTY news stations in these up to date lists. Utilize your present equipment. Book with lists $5.00 PPD.Universal Electronics, 1280 Aida Dr.,Reynoldsburg, OH 43068.

SATELLITE TV RIPOFF? Building a satellite TV terminal? Tired of "infomation package" ripoffs? Let's band together and exchange information on the best LNA's, mixers, kits, P/C boards, antennas and on the ripoffs! Send a SASE (1-15¢ stamp) and your comments, compliments, RIPOFFS etc., and I will duplicate information received and return in your SASE. Mitch WA4OSR, Box 973, Mobile, AL 36601.

THE RACK LINE BY DATAPRO,for individual or repeater these versatile uniform boards will do the job. Boards are $4\frac{1}{2}$" x $6\frac{1}{2}$",(same size as DT-600 board), solder plated with a 22 pin edge connector for easy servicing. All kits have edge connectors included. CW ID SYSTEM, Interfaced for digital, FSK or AFSK keying, 10 minute timer, variable speed (5-25 WPM), 5 or 12 volt use. Kit $37.90 NOW ON SALE $27.90, Board alone $8.95. UT-2 SPEED CONVERTOR, options include transitional autostart, on board clock parallel buffered outputs, and FSK out Board has 2 clocks for basic speed conversion (1 speed per clock), for multi-speed use see XB-6 kit. May be used for ASCII with few modifications,Complete kit $39.95,Board alone $13.95. UT-4D KITS AND BOARDS, See other ad in this issue. KIT $109.95,

continued on page 12

Board $22.95. TU-LOOP POWER SUPPLY, If you're looking for the ideal loop supply for your TU this is it. This board has provisions for a plus and negative supply (12 or 15 volts), a 5 volt supply and a high voltage loop supply. All supplies need not be mounted on the board for operation. Loop supply has on board provisions for keying transistor. All supplies have LED power status indication. Basic +12, +5, -12 volt supply $34.99 Loop supply alone $31.99 both supplies complete $56.99. DUAL XR-6 UART CLOCK,develops 5 baud rates for each side of UART. Rock solid accuracy with use of crystals, good for both UT-2 and UT-4 systems. Kit $29.95, Board alone $8.95. CRYSTAL CONTROLLED AFSK KIT.Supplies rock solid tones of 2125 for mark and 2295 or 2975 for space. Avoid drift with crystal control, Kit $29.95, Board alone $8.95. MS512 SINGLE BOARD SUPPLY.Where space is at a premium this single voltage supply fits. Voltage is determined by regulator,supplies vary from 5 to 24 volts with change of regulator and transformer. All parts including transformer fit on the 2¼ x 4½ board. Current output 700 ma to 1 amp. May be configured for negative or positive supplies. Specify negative or positive voltage, 5,6,8,12,13.2,15,18 or 24 volt. Complete kit (5-18 volt $13.95) (24 volt $14.95) Board alone $5.75. AVAILABLE FROM DAYTAPRO ELECTRONICS,3029 N. Wilshire, Arlington Hts, IL 60004.Add $1.25 for shipping. Use your Visa/MC for added convenience. Phone evenings 312-870-0555.

HAL SYSTEM 2-OS 2000 KSR keyboard with MR 2000 Morse receive option.ESM 914 monitor to of line ST-6000 demodulator w/scope. Never learned how to type USED only a few times on CW and RTTY.Paid over $1400 new,$1150 + shipping. Jim Russell,56 Elm Ave., Brockton,MA 02401. 617-586-7524.

SELL:VENUS SSTV MONITOR and Venus SSTV camera with tripod-make offer. Info-Tech M-300C keyboard,make offer. All in perfect condition. Dr.R.B. Gober,W5ZWN,1115 W 2nd Ave.,Corsicana, TX 75110. 214-872-2237.

QSL SPECIALS: QUALITY QSL's printed 300 for $5.00, 500 for $9.00. Add 20% for shipping.SASE for samples. White & colored stock!.D. Testa,390 Lincoln Newark, NJ 07104. rj.

NEW SUPER-LOG II machine language program for TRS-80 Model I & Model III Computers. Whether you're a ragchewer,contester,DXer or Award Hunter SUPER-LOG II will overwhelm you with "LIGHTING SEARCH & SORT" capability-the absolute ultimate in computerized logkeeping! Instant recall of typical logbook information at your fingertips! Cassette based regularly $19.95 INTRODUCTORY OFFER $16.95 plus FREE Contest Program, Super Duper II. Complete disk Version add $8.00. MICRO-80 INC.,R-2665 Busby Rd., Oak Harbor, WA 98277

UPGRADE SUCCESSFULLY! Make the next trip to the FCC count! New 1981 license Exam Review now available for TRS-80 16K cassette based computers. 12 programs totaling 100K for each license class. Specify General, Advanced or Extra. Only $19.95 each. All three $39.95 PPD. "SUPER LOG", the popular logkeeping system, the ultimate, only $16.95. "MICRO-CLOCK", 19-function timepiece, zones of the world, automatic ID & timer $6.95. MICRO-80 INC.,R-2665 Busby Rd.,Oak Harbor, WA 98277.

WHOLESALE DIGITAL CASSETTES ONLY 59¢ for C-10's in lots of 24 each, add $1.50 shipping. Fully guaranteed! Error free. Used by serious Programmers and Software Firms Nationwide!.Wholesale listing on request! MICRO-80 INC R-2665 Busby Rd., Oak Harbor,WA 98277

KITS & PARTS FOR THE RTTY AMATEUR, featuring the famous MEG-1 Demodulator, ID-1 CW IDer & IPT-1 Interface, Power Supply, & Timer. These units available as kits, or fully assembled, plus a wide selcetion of quality new components, make the Midnight Engineering Group well worth checking out. And don't forget our carbide drill bits, now more sizes available. Send 15¢ stamp for catalog Midnight Engeering Group, POB 349, Galesburg, IL 61401.

RTYM80 IS AN ADAPTION OF THE BIT-BYTER RTY-80(C) software for use on the M80 board. Split screen & type ahead buffer (see BIT-BYTER ad this issue). Price $30.00 PPD. Vic Frump,K8EXJ. Phone 340-372-2047, UHF Sales & Service CO., Rt. 1, Box 52A, Evans, WV 25241. Specify: Name, Address, Call and Level I or II.

 continued on page 13

THE BIT-BYTER IS NOW AVAILABLE for the TRS-80 Model 111. See Bit-Byter ad this issue. Vic Frump K8EXJ, UHF Sales & Service CO.,Rt. 1 Box 52A, Evans, WV 25241.

THE BIT-BYTER SYSTEM designed for the TRS-80*,a radioteletype system for the discerning amateur. It is now possible to enjoy sophisticated yet simple RTTY operation without all the mechanics, bulk, noise and cost by putting your TRS-80* to work. Software features RTY-80:(1)split screen operation. Received info is scrolled across the bottom 2/3s of the screen and the transmit buffer is scrolled across the top 1/3 of the screen with a status banner separating them. (2)works equally well with level 1 or 2 computer.(3)automatic station operation. PTT & CW ID under software control. Automatic return to the receive mode at end of transmission from keyboard command.(4)your call customized into the software to provide:"shift I" sends de xxxxx in Baudot. "Shift D" sends xxxxx to the relay(CW ID). (new)"Shift Q" sends a line of CQ's.(new)"Shift Y" sends a line of RYs.(new)"Shift T" sends 'the quick brown fox'etc.(5)speed control keyboard selection, receive or transmit , of 60 or 100 WPM. (6)on-screen status:counter shows amount of transmit buffer used. Mode shows 'transmit' or 'receive'. Speed selection is displayed i.e.60 or 100 WPM.(7) word edit,transmits a word when space bar is depressd. Mistakes made in a word may be edited prior to transmission.(8)automatic carriage return. (9)buffer size:the software 'discovers' how much memory you have. 4K greater than 1,400 characters available, 16K greater than 14,000 available. Hardware features "Bit-Byter" interface:(1)simple installation, just put in series with your 60 ma loop. (2) completely shielded, this cannot be over emphasized. (3)complete loop isolation through optoisolators.(4) CW ID relay sends required CW ID. (5) PTT relay controls transmitter status. Can be used with external diodes to control TU also. (6) interface unit keys loop from computer and reads the loop into the computer. It is essential that your AFSK unit be keyed from the loop. (7) self contained regulated power supply. (8) assembled & tested. (9)metal cabinet

WANT ADS CONTINUED

matches your TRS-80*. Order from Vic Frump K8EXJ,Phone 304-372-2047, UHF Sales & Service CO., Rt. 1, Box 52A, Evans, WV 25241. Specify: name, address, call letters and level 1 or 2. Cost $129.00. *trademark of the Tandy Corp.

FOR SALE: 6TH EDITION of the "LIST OF RTTY STATIONS IN FREQUENCY ORDER", now contains 1717 frequencies monitored in 1980-81 of commercial stations like press, aeronautical, weather, telex, military, diplo, maritime etc. on shortwave. Schedules of 82 news agency stations on 641 frequencies and 178 special abbreviations are also included. This offset printed list is airmailed to you for $17.00 (Check or cash) from Joerg Klingenfuss, Panoramastrasse 81, D-7400 Tuebingen 7, West Germany.

THOUSANDS OF COMMERCIAL RTTY STATIONS are active between the Amateur shortwave bands. (Take care of legislative restrictions if applicable!) If interested,you need 'software', compiled from nonstop monitoring the complete shortwave spectrum. I have up-to-date frequency, callsign, schedule code lists on press, military, diplo, telex, aeronautical, weather etc. stations. Write for details. Joerg Klingenfuss, Panoramastrasse 81,D-7400 Tuebingen 7, West Germany.

FOR SALE: "LIST OF NEW RADIO REGULATIONS DECIDED AT WARC 1979", containing the original texts of those new Radio Regulations (RRs) which are of essential interest to radio Amateurs. They cover: terms and definitions; designation of emissions (completely revised!); frequencies; callsigns; broadcasting service; Amateur service The chapter dealing with frequencies contains the new Table of Frequency Allocations from 9 kHz to 150 MHz including all footnotes. Most of these RRs will come into force on 1 January 1982. The list is compiled from official ITU documents and includes also the agenda and the final acts of the Conference. This offset printed and hardbound book is airmailed to you for $16.00 (checks or cash) from Joerg Klingenfuss,Panoramastrasse 81, D-7400 Tuebingen 7, W. Germany

HAL AK-1 AFSK CARD. 2125, 2295, 2975 tones. Plug into ST-6 or use stand alone. $20. I pay shipping. W6RLL, J.W. Young, 16808 Goodvale Rd., Canyon Country, CA 91351. (805) 251-2135

BRAND NEW ASCII OR BAUDOT Macrotronics MicroMAC printer interface with program and manual for TRS-80 hookup without need of expansion interface. $85 also pays same day shipping via First Class Priority Mail. Joe,WA5TUM (512)358-7037, 8 A.M-5P.M. weekdays.

TELETYPE, KLEINSCHMIDT Repair parts wanted, unused. M.14 thru 40. Possibly can pick up at your QTH. Cash or trade for any quantity. Write TYPETRONICS, Box 8873, Ft.Lauderdale, FL 33310 or phone 305-583-1340 after 10 PM EST. Send SASE for list of parts, gears, ribbons, supplies, toroids. Fred Schmidt,N4TT ex-W4NYF.

HITS AND MISSES COLUMN CONTINUED

H.R. 8445

Congressman Bill Dannemeyer on December 9, 1980 introduced H.R. 8445 in the House of Representatives. The purpose of this bill is to amend the Communications Act of 1934 to permit the Federal Communications Act to employ voluntary services of Amateur Radio Operators to monitor violations of the act. Congressman Dannemeyer would like Amateurs to express their opinions to him. Congressman Dannemeyers local address is 1370 Brea Blvd., Fullerton, CA 92635.

Well, that's my column for this month. I hope you enjoyed it. Please drop me a line with your viewpoint, articles, construction projects etc. So long for now, George WA6CQW

OOOOOOOOOOOOOOOOOOOOOOOOOOOOOOOOOOOOOO

GUIDE TO RTTY FREQUENCIES

By "Skip" Prinsen WB6CYA

I recently received a copy of the "GUIDE TO RTTY FREQUENCIES" by Oliver P. Ferrell. This is a very well done book which I enjoyed very much. For those of you new to the world of the GREEN keys, Webb Linzmayer does an excellent job of bringing the reader up to date in this mode of operation. THe discussion of the theory is easy to understand for the newcomer as well as informative to the person that has been around for sometime.

There is a short talk on copying RTTY in other languages plus the different news services plus the use of codes by many of these services.Those computer types writing their own programs would do well to read these sections closely as there is a wealth of information in a program that would allow the decoding of encoded RTTY signals before printing.

At the end of this book are several items of interest to the operator, one being a listing of the "Z" codes some of which have been updated and others are marked indicating almost exclusive use by the military.

Two, is a listing of abbreviations that are used throughout the book.

I highly recommend this book to the newcomer as well as the old timer and the advanced operators as well. I learned many things while reading this book and enjoyed reading it while I learned. The book may be purchased from the author at Gilfer Associates,Inc., P.O. Box 239 52 Park Avenue, Park Ridge, NJ 07656 USA.

The cost of this book is $8.95.

OOOOOOOOOOOOOOOOOOOOOOOOOOOOOOOOOOOOOO

RESULTS

ALEXANDER VOLTA 15th RTTY DX CONTEST

1. I3FUE (on front cover)	45,372,096
2. I5MYL	32,202,720
3. W4CQI	19,843,750
4. I5FZI	19,671,000
5. I2OLW	15,203,230
6. I7FKO	13,370,176
7. 3B8RS	12,386,885
8. G3UUP	10,578,302
9. I2WEG	10,366,146
10. I2DMI	9,777,600
11. SM6ASD	9,029,180
12. G3ZWW	6,855,460
13. HA5KBM	6,717,932
14. DM2EDL	5,992,030
15. IC8FHC	5,185,180
16. OK3KII	3,657,545
17. I2ZGP	3,619,980
18. VE2AXO	2,834,970
19. I5CBF	2,829,099
20. I8JRA	2,727,576
21. I1TXD	2,514,820
22. DM3BB	2,415,600
23. OK3RMW	2,148,552
24. DK3MG	1,671,320
25. OZ9GA	1,270.880
26. I4GZF	1,150,200
27. OZ8JYL	861,800
28. WA9BMA	781,900

continued on page 14

VOLTA RESULTS CONTINUED

30. K4VDM	579.792
31. 31. WA2OQO	575,753
32. OK3RJB	517,556
33. OH2CQ	450,275
34. HA6KNP	406,004
35. EA4XM	384,636
36. OK1AQ	366,176
37. DJ9IR	332,520
38. OZ7XE	325,100
39. DM6AK	305,032
40. OZ8GA	294,700
41. DL8QP	288,600
42. DL8MY	285,500
43. G3RDG	283,120
44. WB5QBV	239,108
45. ON7AZ	226,800
46. K6WZ	215,420
47. HB7Z	212,064
48. DM2DLE	204,576
49. JA3AHQ	197,528
50. DL8CX	192,680

Control logs: DM3CF, UK4FAO, W6JOX and SM6HCX.

SWL's

1. Horst Ballenberger	18,087,288
2. Dédic Jaroslav	14,026,984
3. Vaclav Cesak	10,787,240
4. Kurt WÜstner	3,688,700
5. Eichler Helmut	2,084,080
6. Jasper Frank	793,384
7. Schulz GÜnter	143,960
8. Bozek Jindrich	103,376
9. Dorfelt Gerd	38,208
10. Weise Christian	11,800

AWARDS

I3FUE-Silver plaque and certificate.
I5MYL-Plaque and certificate.
W4CQI-Plaque and certificate
Horst Ballenberger-Plague and certificate.
See next months issue of the RTTY JOURNAL for the rules concerning the 16th Alexander Volta contest in May.

OOOOOOOOOOOOOOOOOOOOOOOOOOOOOOOOOOOOOO

RTTY JOURNAL BEGINNERS HAND BOOKS are still available for $4.50.

The RTTY Bibliography is now on sale for $1.00 plus an SASE (8½ x 10 envelope with 42¢ in stamps) will do it. ALL RTTY articles from the Journal and as many as we can find from other magazines have been included in this index.....

VHF NEWS* VHF NEWS* VHF NEWS* VHF NEWS* VHF NEWS* VHF NEWS* VHF NEWS* VHF

With the April issue of the RTTY JOURNAL we will have a new (new to us) editor of the VHF news column. His name is John Cunningham, WA9WJG. John has been licensed as an Amateur for thirteen years and has been on the "GREEN KEYS" for eleven of those years. Says he has been very active for only about two of those years, mainly in and around the area of East Central Illinois and West Central Indiana.

John uses Heath equipment on low bands and Yaesu equipment on two meters. His RTTY gear consists of a HAL ST6000, 28 ASR, TRS-80 W/M80 M800. John works as an Industrial Mechanic for "Quaker Oats" (my favorite cereal) in Danville, Illinois (my home state). You can find John at home in Covington, Indiana 47932, address is:RR2, Box 91. Please give all of your VHF inputs to John so we can get this column going again.

The following is , in part, a newsletter sent to some midwestern Amateurs by John: "I would like to impart what little information I have on to you and hopefully stir up more interest in the activities on this mode. If you have any info or ideas you would like to pass on to other RTTY operators please let me know.

Most of the guys that I talk to seem to think that there is not much RTTY on 2 meters because of a lack in 2 meter RTTY. But personally I have found that there are many advantages to working VHF RTTY using AFSK, I am sure that you are all aware of that. My point is that VHF is the perfect place for a newcomer to get on and get the feel of RTTY. He is working his local friends so he is more comfortable or at least less nervous, and he can use equipment that is less expensive. Granted it does take more antenna to work Simplex than it takes to reach the repeater down the block but antennas are not that much of a problem on 2 meters. They are not as large as HF antennas and they are not nearly as expensive to purchase. Plus, if you are inclined toward home brew, 2 meter antennas are not hard to build.

O.K. so if I have an antenna up...where do I find RTTY activity on 2 meters, you ask. Well, I will tell you where I find activity and then you can if you will, tell me where you find it.

I find quite a few guys on the Gridley IL 10/70 repeater. The activity on this machine seems down a bit from what it has been, but I worked two stations in Iowa through it during the holidays. Gridley is a fine machine.

There are several stations on RTTY in the Champaign/Urbana area but with the 147.60/00 machine down at the moment they have been harder to find lately. In the Crawfordsville, IN area several stations are on. The RTTY guys there are leaving their rigs on monitoring the .865/.265 voice repeater. If they want to sent a short message they just dump it on the voice machine. The Crawfordsville gang gets on the repeater every Sunday night after the Traders net which follows the regular net at 8PM EST. The purpose of this is to exchange ideas on or about RTTY.

There are several stations listening on 146.55 some with autostart and some with SELCAL so you may find some activity on there."

Thanks for the info John, hope all of our readers will join me in welcoming you to the RTTY JOURNAL.....Dee, KA6NYW, Editor/Publisher.

Many thanks to Bill Wright, K4YZU for his inputs to the JOURNAL. We will be forwarding them on to WA9WJG in the future but here is part of what he sent to us:"After a bout with flu and rig trouble we are back on the air.The net is going good and traffic is picking up. At the time I am writing this traffic volume is up and the QTC is getting higher to where we are needing more stations to be liaison to the NTS with the traffic. Net meets on 3630 KHz at 0330 UTC + or - the QRM. Please note the net is after the EAN and the CAN, but I think the PAN is still is session as well as the northwest RTTY net. Hope to see more RTTYers on in the coming months. This is a type of net that can handle volumes of traffic, especially during times of emergency."

Thanks fellows and readers please remember to send your inputs to John, WA9WJG at the address above. See ya all...Dee

DOVETRON

MPC-1000C

Multipath Correction
In-Band Diversity &
AFSK Tone Keyer

Amateur Net: $545.00

Standard features include CONTINUOUSLY tuneable Mark and Space channels (1000 Hz to 3200 Hz), Dual Mode (MARK or FSK) Autostart and internal high level neutral loop keyer (20 to 60 ml). Both EIA and MIL FSK outputs are provided for direct interface to microprocessor and video terminal peripherals.

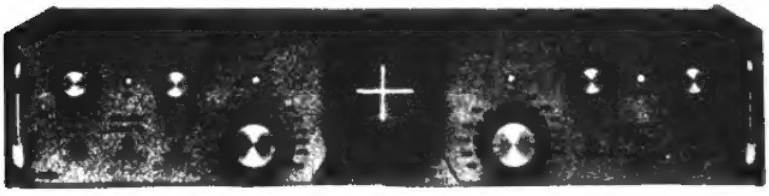

MPC-1000CR

Signal Regeneration &
Speed Conversion

Amateur Net: $645.00

A front panel switch permits internal TSR-200 Signal Regenerator-Speed converter assembly to electronically "gear-shift" between 60, 67, 75 and 100 WPM. All incoming and outgoing signals are regenerated to less than 0.5% bias distortion. Also available with DIGITAL Autostart (TSR-200D): Amateur Net: $695.00

MPC-1000R/-TSR-500

Dual UART Regeneration,
Speed Conversion, 200
Char. Memory, Word Correction & DIGITAL
Autostart

Amateur Net: $895.00*

The MPC-1000R/TSR-500 provides Preloading and Recirculation of the 200 character FIFO Memory, a keyboard-controlled Word Correction circuit, Variable Character Rate, Tee Dee Inhibit, Blank/LTRS Diddle, a Triple Tone-Pair AFSK Tone Keyer and a Character Recognition/Speed Determination DIGITAL (DAS-100) Autostart mode.

*The MPC-1000R is also available without a TSR assembly and functions as a MPC-1000C with a Triple Tone-Pair AFSK Tone Keyer. This "Basic-R" permits future expansion with a TSR-100, TSR-200, TSR-200D or TSR-500 by simply lifting the lid and plugging in the appropriate TSR assembly: Amateur Net (Basic-R): $595.00

Your QSL will bring complete specifications, or call: 213-682-3705.

DOVETRON

627 FREMONT AVENUE
(P. O. BOX 267)
SOUTH PASADENA, CA. 91030

MPC-1000R BY DOVETRON

MULTIPATH CORRECTION, IN-BAND DIVERSITY, SIGNAL REGENERATION, UP-DOWN SPEED CONVERSION, 200 CHARACTER FIFO MEMORY, KEYBOARD-CONTROLLED WORD CORRECTION & DIGITAL AUTOSTART

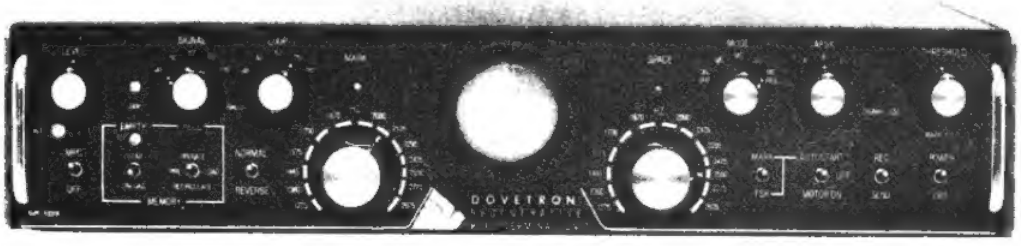

THE MPC-1000R REGENERATIVE RTTY TERMINAL UNIT

The DOVETRON MPC-1000R is a complete Transmit-Receive modem designed for optimum radio teleprinter communications on land, sea and in the air.

Standard features include a high level loop supply and keyer (neutral or polar), EIA and MIL FSK outputs, a phase-continuous AFSK Tone Keyer with three selectable Mark - Space - Shift tone pairs, Mark, FSK & Digital Autostart, Automatic Markhold, an internal RY Generator for terminal unit Self-Test and circuit adjustment, and a Signal Loss Alarm circuit.

The MPC Series is available in six different models to meet your exact requirements.

Complete specifications are available on your request, or call 213-682-3705.

DOVETRON

627 Fremont Avenue
South Pasadena,
California 91030, U.S.A.

RTTY Journal

SECOND CLASS PERMIT PAID
AT ENCINITAS, CA 92024

PO BOX RY

Cardiff by the Sea, CA. 92007